WT588D-U Programmable Sound Module

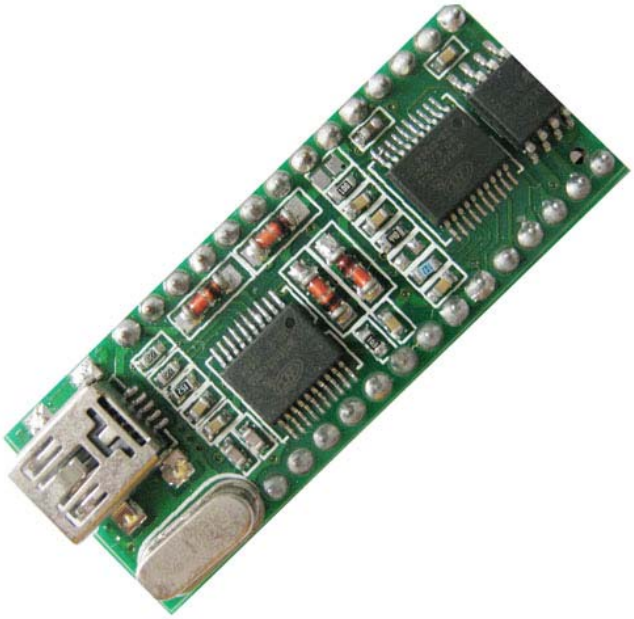

http://www.w1999.cn

Manual

Data Sheet

Document Date: June 2nd, 2009

Document Revision: V1.1

Table of contents

1、Product features

- Package of 28 pins module, which can be replaced memory for gainting different lengths of storage time.
- Support SPI-Flash, which ‘s capacity is 2M bit ~ 32M (Note: 1byte = 8bit)
- WT588D-20SS voice used as a control core chip.
- Embedded human voice processor, feel very natural and sweet.
- Good audio quality output for 13Bit/DA converter and 12Bit/PWM processing of audio.
- Support for loading 6K ~ 22KHz audio sampling rate.
- PWM output can directly promote 0.5W/8Ω speakers and plenty of current.
- Support DAC / PWM output
- Support for loading WAV audio format.
- Support key control mode, one-wire serial control mode, three-wire serial control mode.
- A variety of IO trigger ways can be seted to in button control mode.
- The way of BUSY signal output can be set in a random manner.
- Loading no more than 500 segments voice for editing.
- Address bit is controled by 220 segments voice, but a single address bit just can load up to 128.
- Voice player to enter the sleep mode to stop immediately.
- It is simple interface and convenient because of using WT588D Voice Chip that benefited to exert its functions.
- A lot of operations can be finished in software. Such as setup control mode, inserting voice,

compositing voice, calling voice, etc.

- Free to insert mute, mute time range 10ms ~ 25min.
- Support online USB download / offline USB download. What's more, it also can download data to SPI-Flash even if WT588D-U are working.
- Operating voltage: DC2.8V ~ 5.5V.
- dormant current less than 10uA
- Powerful anti-jamming. Widely used in the industrial field.

2、Functional Description

Button control mode is flexible to trigger and free to set any button to re-trigger .There are 15 trigger ways. Including trigger Impulse Repetition , trigger pluse Without Repetition , invalidation keys, no cycle Level , Recycled Level , Non-Maintained Cycle Level, Non-Cycle for The Last One ,Non-Cycle for The Next One , Cycle for The Last One , Cycle for The Next One, Volume +, Volume -, play / pause, stop, play / stop, etc . One-wire serial control mode and three-wire serial control mode, not only can control voice play, stop, loop play and volume size by the MCU, but also can direct triggering any voice in address bit from 0 to 219.

3、application scopes

Widely range of applications. Almost related to all the voice places, such as Stop devices, annunciators , reminder, alarm clock, learning machine, intelligent home appliances, therapeutic equipment, electronic toys, telecommunications, reversing radar and a variety of automatic control devices, etc. Technology meet up to the requirements of industries application.

4、Application block diagram

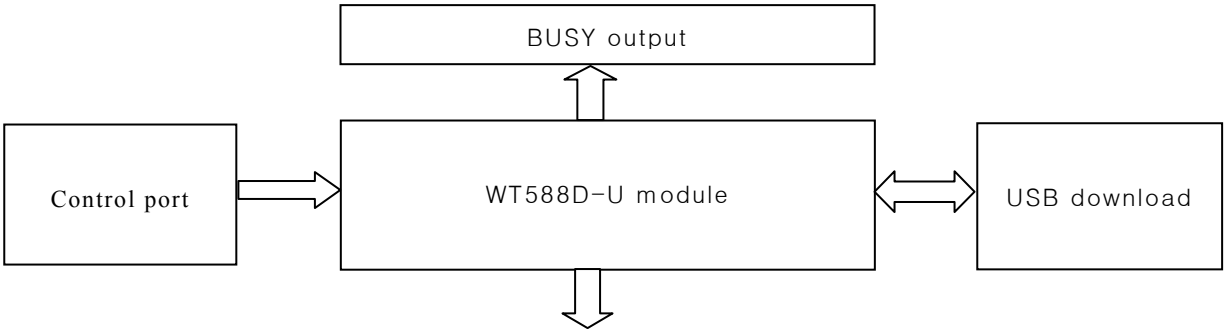

Voice output

5、Package pins diagram

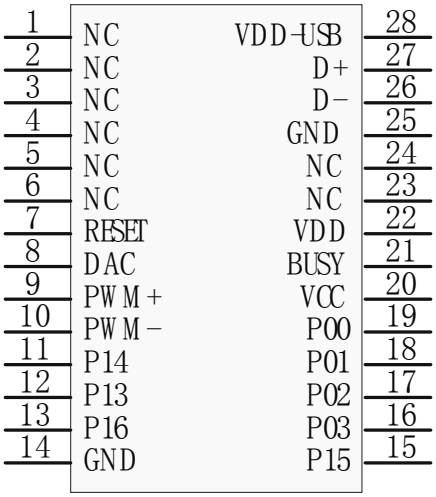

Pin Description

Package pins	Pins mark	Brief	Functional Description
1	NC	NC	blank
2	NC	NC	blank
3	NC	NC	blank
4	NC	NC	blank
5	NC	NC	blank
6	NC	NC	blank
7	RESET	RESET	Reset pin
8	DAC	DAC	DAC Audio output pin, need an external amplifier to drive speaker
9	PWM+	PWM+	PWM+ Audio output pin, which can directly drive speaker with the PWM-
10	PWM-	PWM-	PWM- Audio output pin, which can directly drive speaker with the PWM+
11	P14	SPI-FLASH_DI	use for external download manager
12	P13	SPI-FLASH_DO	use for external download manager
13	P16	SPI-FLASH_CLK	use for external download manager
14	GND	GND	GND

15	P15	SPI-FLASH_CS	use for external download manager
16	P03	K4/CLK/DATA	Button / three-wire clock / one-wire data input pin
17	P02	K3/CS	Button / three-wire chip input pin
18	P01	K2/DATA	Button / three-wire data input pin
19	P00	K1	Button
20	VCC	VCC	Analog power supply input pin
21	BUSY	BUSY	busy signal output pin
22	VDD	VDD	Data power supply input pin
23	NC	NC	blank
24	NC	NC	blank
25	GND	GND	USB GND
26	D-	USB_DATA-	USB data
27	D+	USB_DATA+	USB data
28	VDD_USB	VDD_USB	USB power positive

Note:Pin25,26,27,28 use to download for other USB slot.

6、electrical parameters

$V_{DD} - V_{SS}$ = 4.5V, TA = 25°C， No load

Parameter	marker	Environmental conditions	min	Typical	Max	Units
Operating voltage	V_{DD}	F_{sys}=8MHz	2.8		5.5	V
Operating Current	I_{OP1}	No load	-	4.5	5.5	mA
Stop current	I_{DD2}	No load	-	1	2	uA
Dormancy current-mode	I_{OP2}	No load	-	650		uA
Low-voltage input	V_{IL}	All pin input	V_{SS}	-	$0.3V_{DD}$	V
high-voltage input	V_{IH}	All pin input	$0.7V_{DD}$	-	V_{DD}	V
Input currentBP1、BP2、RESET	I_{IN1}	V_{IN}=0V Pull-up resistance=500KΩ	-5	-9	-14	uA
Input currentBP1、BP2、RESET	I_{IN2}	V_{IN}=0V Pull-up resistance=150KΩ	-15	-30	-45	uA
output current	I_{OL}	VDD=3V, VOUT=0.4V	8	12	-	mA
	I_{OH}	VDD=3V, VOUT=2.6V	-4	-6	-	mA

(BP0)	I_{OL}	VDD=4.5V, VOUT=1.0V	-	25	-	mA
	I_{OH}	VDD=4.5V, VOUT=2.6V	-	-12	-	mA
output current (BP1)	I_{OL}	VDD=3V, VOUT=0.4V	4	10	-	mA
	I_{OH}	VDD=3V, VOUT=2.6V	-4	-6	-	mA
output current PWM+/PWM-	I_{OL1}	RL=8Ω	+200	-	-	mA
	I_{OH1}	【PWM+】 -- 【RL】 -- 【PWM-】	-200	-	-	mA
DAC Max current	I_{DAC}	RL=100Ω	-2.4 -4.0	-3.0 -5.0	-3.6 -6.0	mA
Pull-up resistor test	R_{PL}		75	150	225	

7、Absolute limits of the environment parameters

parameters	marker	Environmental conditions	rating	units
power	$V_{DD} - V_{SS}$	-	-0.3 ~ +7.0	V
Input voltage	V_{IN}	input	V_{SS}-0.3 ~ V_{DD}+0.3	V
Storage temperature	TSTG	-	-55 ~ +150	°C
Used temperature	T_{OPR}	-	-40 ~ +85	°C

8、control mode

8.1、Buttons Control Mode

Pins can directly trigger a function of chip to work. Each pin of the trigger can be set individually. Shockproof time of this mode time is about 10ms. There are 15 trigger ways. Including trigger Impulse Repetition , trigger pluse Without Repetition , invalidation keys, no cycle Level , Recycled Level , Non-Maintained Cycle Level, Non-Cycle for The Last Tone ,Non-Cycle for The Next Tone , Cycle for The Last Tone , Cycle for The Next Tone, Volume +, Volume -, play / pause, stop, play / stop, etc. see the following trigger timing diagram. For more details, see the following chart:

8.1.1、Trigger Impulse Repetition

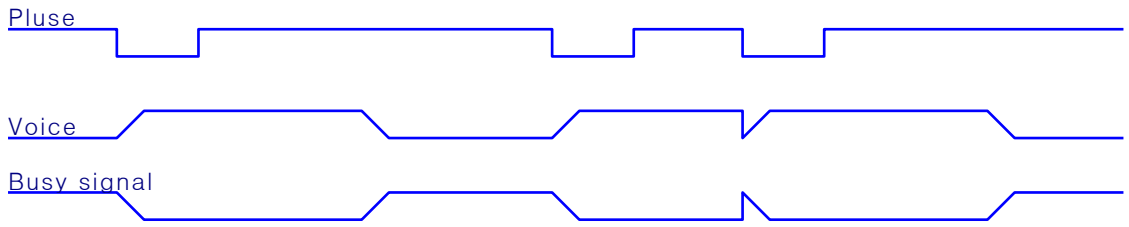

Note: Negative trigger pulse. When the I / O port inspects the falling edge (for example, the I / O port click short-circuit to GND), Voice will be broadcast .If do that again when the Voice are still playing, the voice will be interrupted and replay. Therefore, it will be replay as long as has falling edge signal.

8.1.2、Trigger Impluse Without Repetition

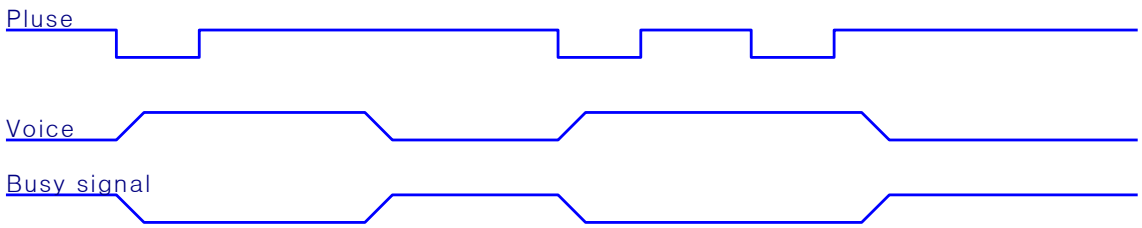

Note: Negative trigger pulse. When the I / O port inspects the falling edge (for example, the I / O port click short-circuit to GND), Voice will be broadcast. If do that again when the voice are still playing , the voice will not be interrupted and continue to broadcast. To be valid unless the voice at an end and inspects the falling edge.

8.1.3、Recycled Level

Note: High level stops when the I / O port is low and keep play. Continue to keep a low level even if the

first time is over. It will go along replay until change into high level. Low level has sound. High level hasn't.

8.1.4、No Cycle Level

Note: Trigger level. High level stops when the I / O port is low and keep play. I will be not Continue to play even if the first time is over and keep a low level. The voice just play one time after being triggered. If you need to replay, please make the I / O port at high level, and then pull low. Finally, keep it at low level .The end.

8.1.5、Non-Maintained Cycle Level

Note: Negative Pulse /trigger Level. When the I / O port at low level and keep playing, at the same time, high level don't stop until the voice is over. When the end of the first time. If keep at the low level, it will continue to repeat .If not, when finish it will stop automatically.

8.1.6、Play/Stop

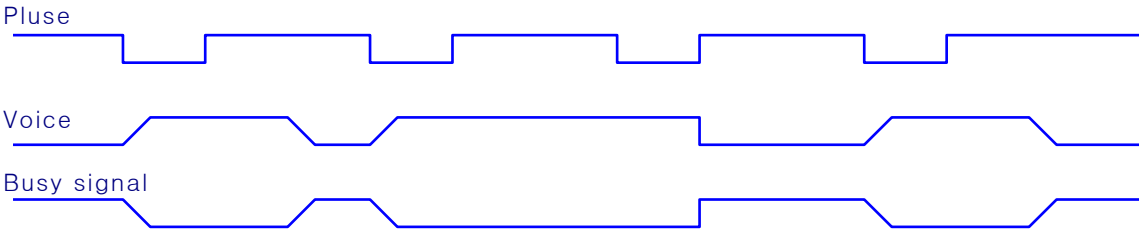

Note: Negative trigger pulse. Negative pulse starts to play when the next one stop. Whether the voice is in play or not must in accordance with this regulation.

8.1.7、Non-Cycle for The Next Tone

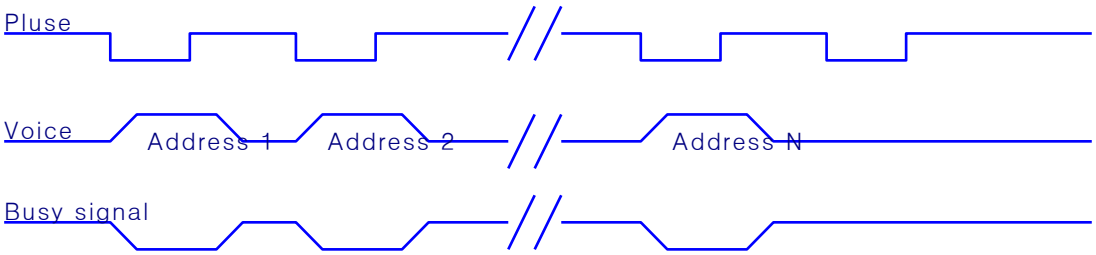

Note: Negative trigger pulse. Trigger with a button to play a sound. A pulse plays a piece, the next pulse plays the next piece .It doesn't stop until the last piece is finished. Repeat the same operation. Can only play to the last.

8.1.8、Non-Cycle for The Last Tone

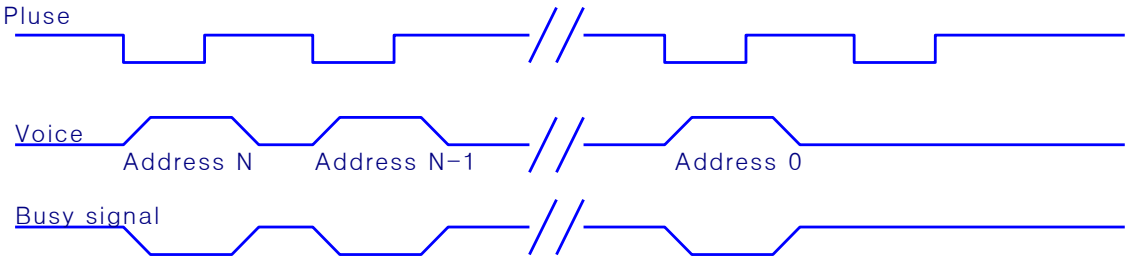

Note: Negative trigger pulse. Trigger with a button to play a sound. A pulse plays a piece, the next pulse

plays the last piece. No longer trigger forward when the front voice is over. Repeat the operation, can only play to the last.

8.1.9、Cycle for The Next Tone

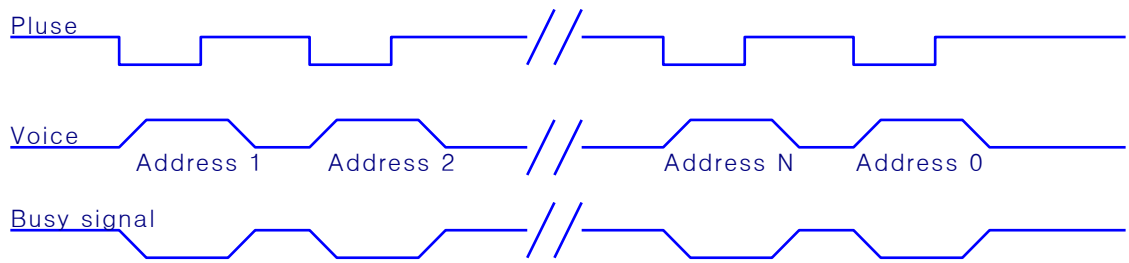

Note: Negative trigger pulse. Trigger with a button to play a sound. A pulse plays a piece , the next pulse plays the next piece. Repeat the operation. It will start again from the first piece when the last shows off. Loop continuously.

8.1.10、Cycle for The Last Tone

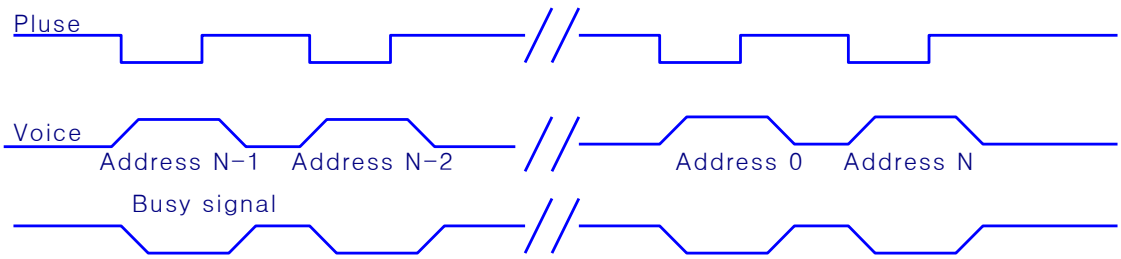

Note: Negative trigger pulse. Trigger with a button to play a sound. A pulse plays a piece, the next pulse plays the last piece. Repeat the operation. It will start again from the last piece when the front shows off. Loop continuously.

8.1.11、Pause

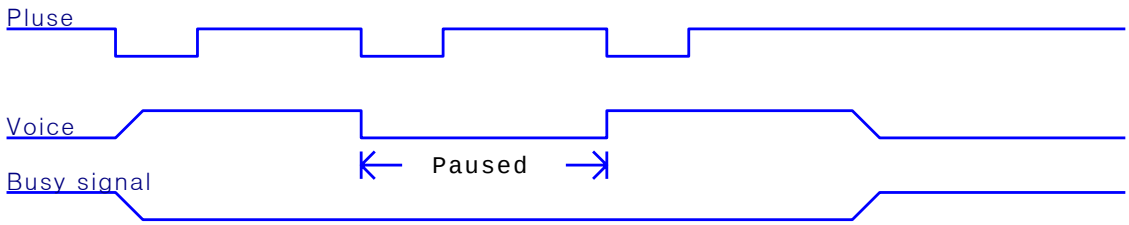

Note: Negative trigger pulse. The first pulse voice is playing but in a suspended state. The second pulse still working, which triggers the suspension of the voice. BUSY remain in this state.

8.1.12、Stop

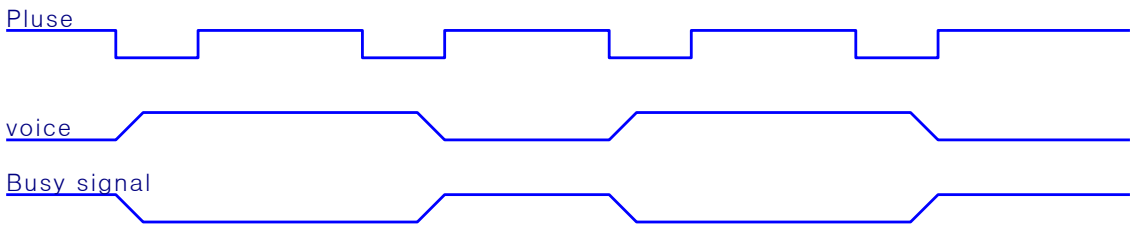

Note: Negative trigger pulse. Stopped the voice, which is playing . Trigger once again invalidly when the voice is stopped.

8.2、One-Wire Serial Port Control Mode

Send data through a data line. One-wire serial port can control voice play, stop, volume adjustment and directly trigger, etc. P00 ~ P02 I/O port can select screen or any trigger mode.

8.2.1、Port Allocation Table

I/O 口	P00	P01	P02	P03

function	Key-press K1	Key-pressK 2	Key-pressK3	DATA

8.2.2、Order and Speech Cording

Commend code	Functions	Descriptions
E0H～E7H	volume adjustment	8 volume can be adjusted, E0H is minimum, E7H is the largest volume when working or standby.
F2H	Cycle play	the current voice addresses can be recycled When working.
FEH	Stop playing	Voice command to stop playing

8.2.3、Voice Address Correspondence

Data（hex）	functions
00H	Play the zero piece voice
01H	Play the first piece voice
02H	Play the second piece voice
……	……
D9H	Play the 217th piece voice
DAH	Play the 218th piece voice
DBH	Play the 219th piece voice

8.2.4、Control Time Sequence Chart

One-wire serial port only through a data communication line control time sequence. According to different duty cycle of levels represent different data bit. Firstly, data signals is drawned down 5ms, and then send data .The duty cycle of High level and low level 1:3 means data bit 0, if 3:1 means data bit 1, high in the former. Data signals send from low to high. When Send data, you just send address datum directly can trigger to play voice without sending command code and instruction. D0 ~ D7 means an address or command data. 00H ~ DBH of data send address order. E0H ~ E7H is volume adjustment order.F2H is Loop orders. FEH orders to stop playing. Details of time sequence in the following diagram:

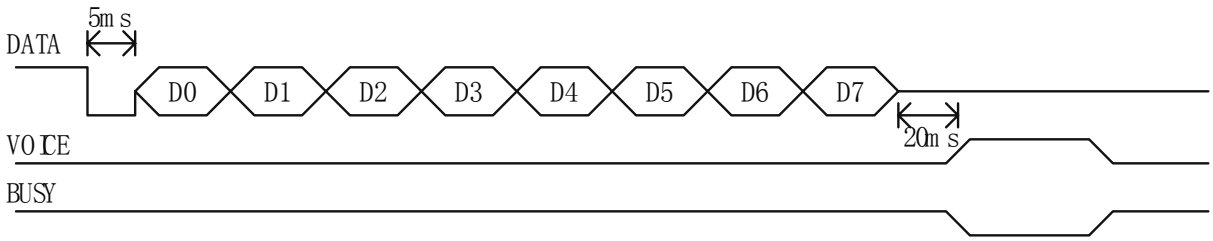

Description: WT588D-U can not enter dormant state under the one-wire serial interface. Therefore, using with caution when battery-powered .DATA is a communications line for one-wire serial interface, WT588D-U voice module begins to send data signals after current is switched on and wait 17ms.BUSY voice for the busy signal output. Wait for 20ms Data after sent successfully. And BUSY output will be to respond. Details of data bit duty cycle in the following chart:

High level：Low level=1：3 means 0

High level：Low level =3：1 means 1

8.2.5、The Example of 1-Wire Serial Port Control Time Sequence

For example, Send time sequence of data 9CH chart in one-Wire Serial Port Control mode is show in figure:

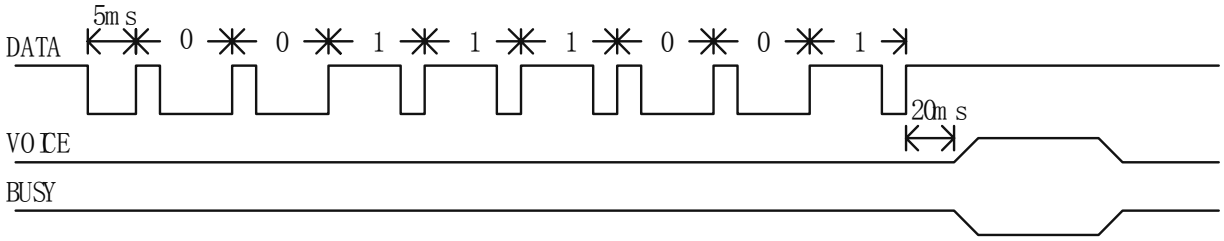

8.2.6、Models of Procedure

Master SCM：PIC16F54，Clock frequency :4MHz

```
Send one-line (unsigned char addr)
 {
sda=0;
delay1ms(5);          /* Data signals at low   level 5ms */
for(i=0;i<8;i++)
```

```
 {   sda=1;
if(addr & 1)
 { delay1us(600);      /* High level：Low level =600us：200us，means data=1 */
sda=0;
delay1us(200);}
else {
delay1us(600);        /* High level：Low level =200us：600us，means data=0 */
sda=0;
delay1us(200);  }
addr>>=1;  }
sda=1;  }
```

8.3、Three-Wire Serial Control mode

CS, DATA and CLK are composed of Three-Wire Serial Control mode .Time sequence according to SPI communication. Three-wire serial port can control command control and voice broadcast. All key-presses are not valid in the three-wire serial mode.

8.3.1、Port Allocation Methods

I/O 口	P00	P01	P02	P03
Functions	---	DATA	CS	CLK

8.3.2、Voice and Command Code Corresponding to Table

Command Code	Functions	Description
E0H ～ E7H	Volume adjustment	8 volume can be adjusted, E0H is minimum, E7H is the largest volume when working or standby.
F2H	Cycle play	The current voice addresses can be recycled When working.
FEH	Stop playing	Voice command to stop playing

8.3.3、Voice Address Corresponds

data（hex）	functions
00H	Play the zero piece voice
01H	Play the first piece voice
02H	Play the second piece voice
……	……
D9H	Play the 217th piece voice
DAH	Play the 218th piece voice
DBH	Play the 219th piece voice

8.3.4、Three-Wire Serial Port Control Time Sequence

CS, CLK and DATA pins are composed of Three-Wire Serial Control mode .Time sequence follows to SPI communication. CS downs to 5ms in order to wake-up WT588D-U voice module. Low bit receives data at the rising edge of CLK in the first place. Clock cycles between the range of 100us ~ 2ms, recommended 300us. The BUSY voice outputs in response to the successful reception of data. Data signals send from low to high. When Send data, you just send address datum directly can trigger to play voice without sending command code and instruction. D0 ~ D7 means an address or command data. 00H ~ DBH of data send address order. E0H ~ E7H is volume adjustment order.F2H is Loop orders. FEH orders to stop play. Details of time sequence in the following diagram:

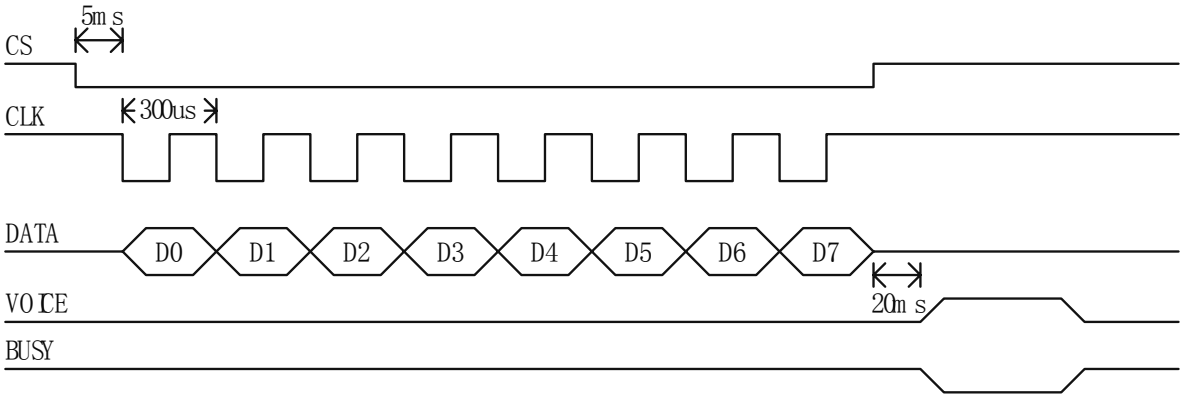

Description: WT588D-U voice module begins to send data signals after current is switched on and wairt 17ms.

8.3.5、Models of Procedure

```
（Master SCM PIC16F54，System frequency 4MHz）
Send threelines(unsigned char addr)
 { cs=0;
delay1ms(5);                /* Chip select signal keep low level 2ms */
for(i=0;i<8;i++)
 {   scl=0;
if(addr & 1)sda=1;
else sda=0;
addr>>=1;
delay1us(300);              /* Clock cycle 300us */
scl=1;
delay1us(300);   }
cs=1;}
```

9、Typical Application Circuit

9.1、Typical Application Circuit of Key to Control(PWM output，5V Supply）

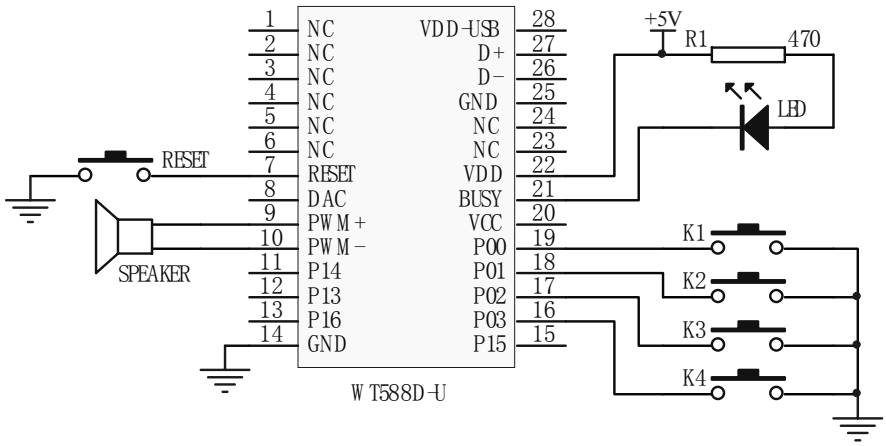

9.2、Typical Application Circuit of Keys to Control（PWM output，3.3V Supply）

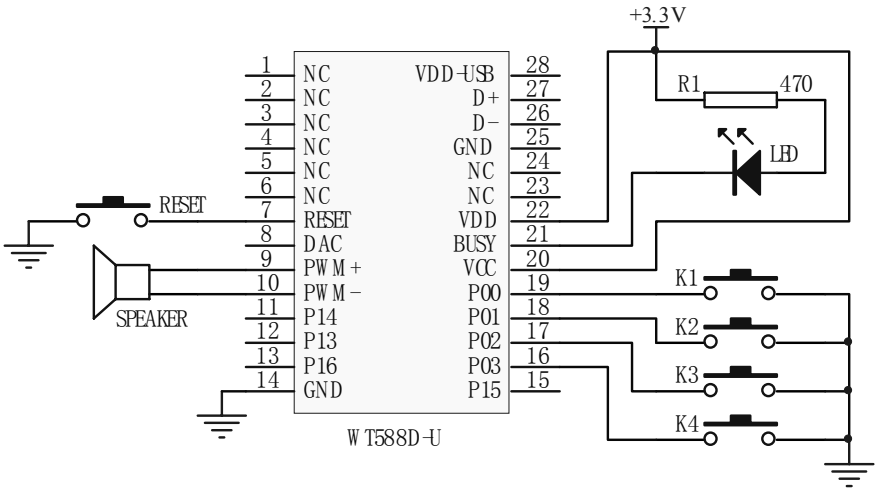

9.3、Typical Application Circuit of Keys to Control（DAC output）

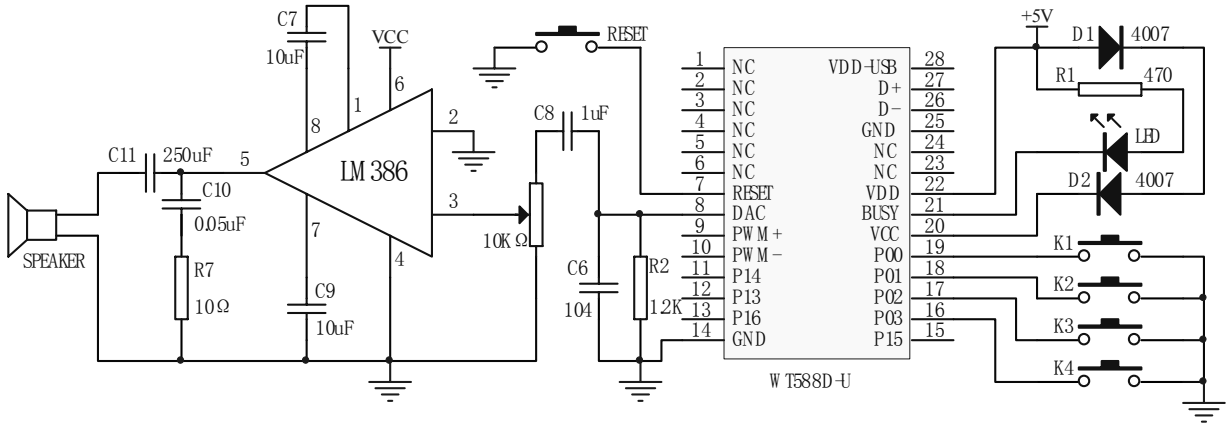

Note: DAC output port together with the ground, which connect with a 1.2K resistor and capacitor 104. when use DAC output way, and then the audio signal re-entering amplifier part, as circuit diagram of R2, R6 shown.

9.4、Typical Application of one-line Serial Control Circuit (PWM out)

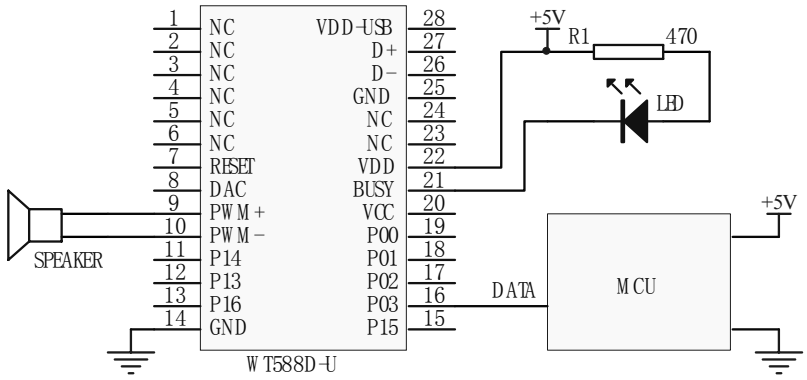

9.5、Typical Application of First-line Serial Control Circuit（DAC Output）

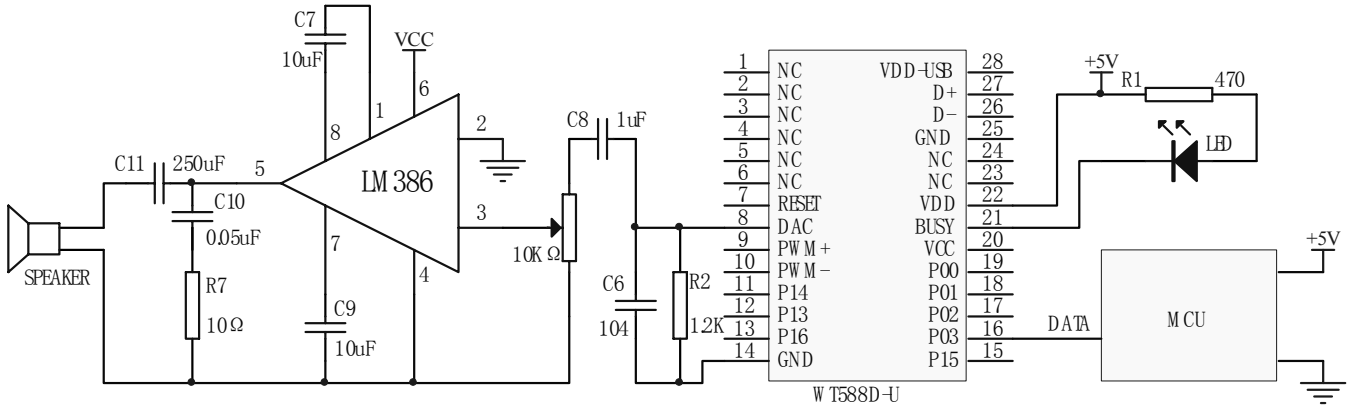

Note: DAC output port together with the land , which connect with a 1.2K resistor and capacitor 104. when use DAC output way, and then the audio signal re-entering amplifier part, as circuit diagram of R2, R6 shown.

9.6、0ne-Wire Serial Port MCU5V Power/ Module 3.3V Power Supply Application circuit (PWM output)

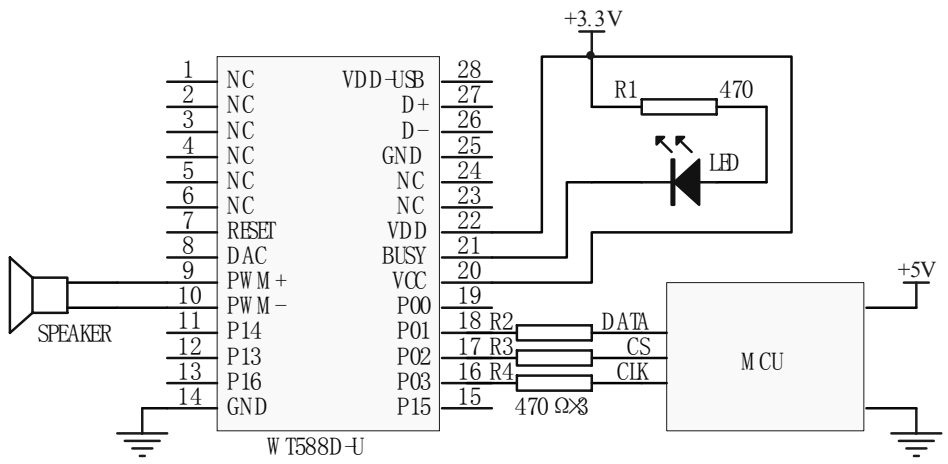

9.7、Three-Wire Serial Control of Typical Application circuit (PWM output)

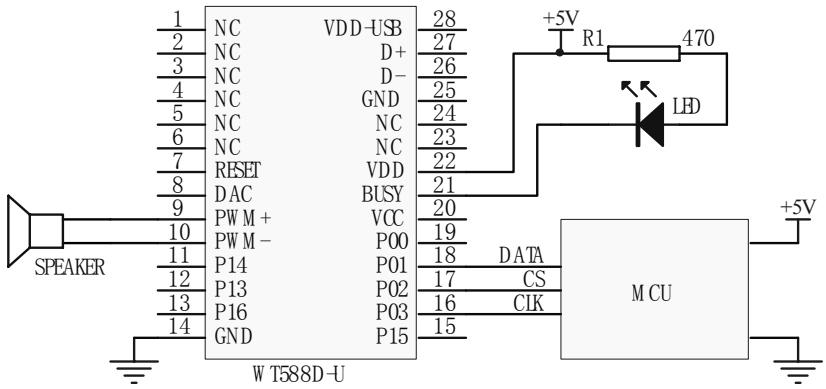

9.8、Three-wire serial control of a typical application circuit (DAC output)

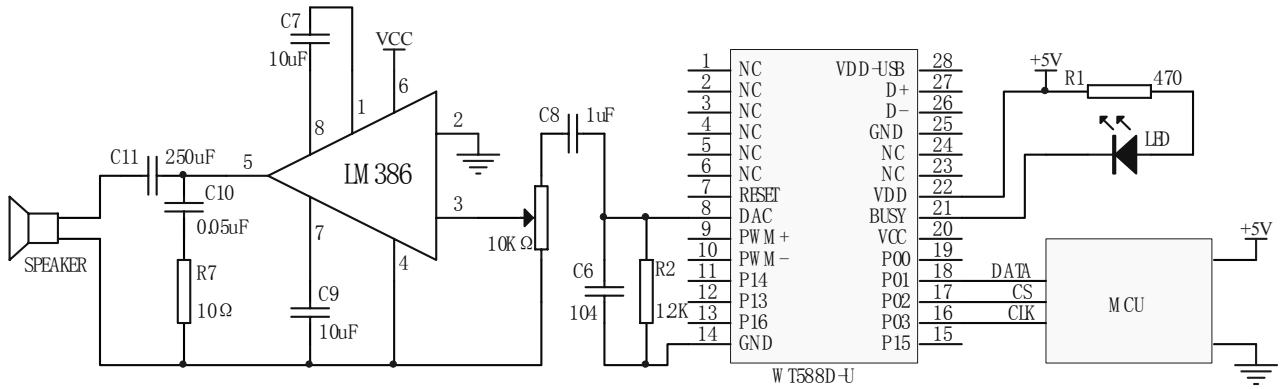

Note: DAC output port together with the ground, which connect with a 1.2K resistor and capacitor 104.

When use DAC output way, and then the audio signal re-entering amplifier part, as circuit diagram of R2, R6 shown.

9.9、Three-wire serial MCU5V power / module 3.3V power supply application circuit (PWM output)

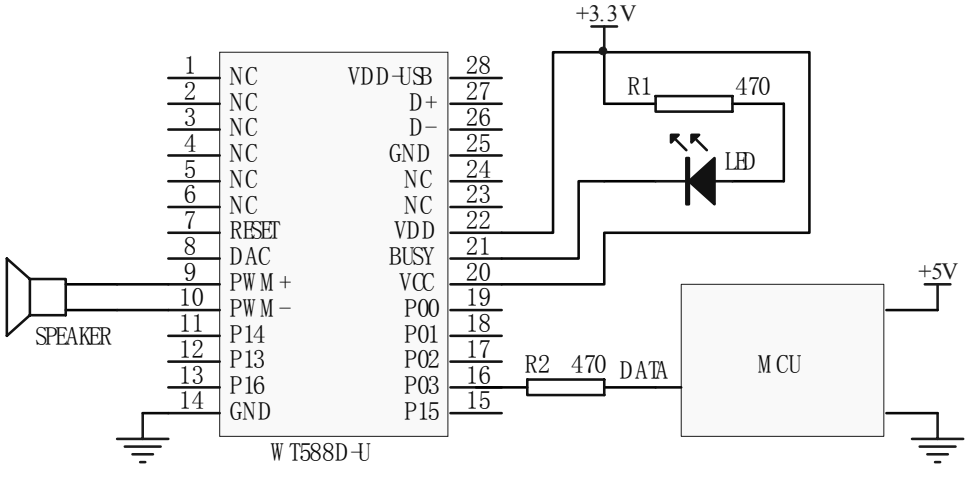

MCU5V

10、Control procedures

10.1、One-wire serial control of assembler

Description: This procedure is test program. Please change the IO port of MCU according to Practical application.

```
 ORG 0000H
        KEY EQU P1.1      ;    Button pin
        SDA EQU P3.0      ;    Data pin
DAIFAZHI EQU 50H          ;    A temporary address for Code value
        MOV DAIFAZHI,#0H;   Code made the initial value of 0
        MOV R5,#8         ;    8-bit Circulation of Fat Code

MAIN:
        JB KEY,MAIN
        MOV R6,#20        ;Delay 20MS
        LCALL DELAY1MS
        JB KEY,MAIN       ; Buffeting button to judgment
        JNB KEY,$         ;Wait for button release
```

```
        LCALL one-line      ; Transfer one-wire fat code Subroutine
        INC DAIFAZHI        ; Code value plus 1 fat
        MOV A,DAIFAZHI
        CJNE A,#220,XX2 ;Whether reach max 220 of the Voice paragraph or not
XX2: JC XX3
        MOV DAIFAZHI,#0H
XX3: LJMP MAIN

One-line:               ;//// one-wire fat code Subroutine
            CLR SDA
            MOV R6,#5       ; Delay 5MS
            LCALL DELAY1MS
                MOV A, DAIFAZHI
        LOOP:     SETB SDA
                  RRC A
                JNC DIDIANPIN   ; High level pulse   High: Low=3:1
            LCALL DELAY200US
 LCALL DELAY200US
            LCALL DELAY200US
                CLR   SDA
            LCALL DELAY200US
            LJMP LOOP1
     DIDIANPIN                  ; Low level pulse   High: Low =1:3
             LCALL DELAY200US
                CLR SDA
            LCALL DELAY200US
 LCALL DELAY200US
            LCALL DELAY200US
        LOOP1:   DJNZ R5,LOOP
                 MOV R5,#08H
            SETB SDA
                RET
 DELAY200US:   MOV R6,#100     ; Delay Subroutine 400US
                DJNZ R6,$
             RET
     DELAY1MS:                  ; Delay Subroutine 1ms, help R6 evaluate, Modified to extend the
time

             L1:   MOV R7,#248
             DJNZ R7,$
```

```
            DJNZ R6,L1
            RET
END
```

10.2、One-wire serial control of C-voice procedures

Description: This procedure is test program.Please change the IO port of MCU according to Practical application.

```
#include <at89x2051.H>
sbit KEY=P1^1; /* The 2nd of P1 port is P1_1 */
sbit SDA=P3^0; /* The 4th of P3 port is P3_0 P3_0 */
void delay1ms(unsigned char count) //1MS delay time Subroutine
{
      unsigned char i,j,k;
      for(k=count;k>0;k--)
            for(i=2;i>0;i--)
            for(j=248;j>0;j--);
}

void delay100us(unsigned char count)   //100US Delay time Subroutine
{ unsigned char i;
      unsigned char j;
            for(i=count;i>0;i--)
            for(j=50;j>0;j--);
}

Send_oneline(unsigned char addr)
{
      unsigned char i;
      SDA=0;
      delay1ms(5);              /* delay 5ms */
      for(i=0;i<8;i++)
            {SDA=1;
          if(addr & 1)
              {delay100us(6);           /* 600us */
              SDA=0;
              delay100us(2);           /* 200us */
              }
          else {
               delay100us(2);           /* 200us */
              SDA=0;
```

```
            delay100us(6);          /* 600us */
            }
        addr>>=1; }
        SDA=1;
}

main()
{unsigned char FD=0;
    P3=0XFF;
    while(1)
        {
        if(KEY==0)
            {
            delay1ms(10);
            if(KEY==0)      // Increase Code value of fat by button P1.1.
                {
                Send online (FD);
            FD++;
                if(FD==220) // 0ne-wire Serial port, the voice segment up to a maximum of 220
    {
                    FD=0;
                }
                while(KEY==0);   // Waiting for button release in order to avoid Miscarriage of justice
            }
      }
}
```

10.3、Three-wire serial control of assembler

Description: This procedure is test program.Please change the IO port of MCU according to Practical application.

```
            ORG 0000H
        KEY EQU P1.1      ; Button pin
        CS  EQU P3.1      ;CS trigger pin
        SCL EQU P3.2      ;Clock pin
        SDA EQU P3.0      ;Data pin
DAIFAZHI EQU 50H;A temporary address for Code value
            MOV DAIFAZHI,#0H;Code made the initial value of 0
```

```
        MOV R5,#8           ;Code made the initial value of 0

MAIN:
        JB KEY,MAIN
        MOV R6,#20          ;Dalay time 20MS
        LCALL DELAY1MS
        JB KEY,MAIN         ; Buffeting button to judgment
        JNB KEY,$           ; Wait for button release
        LCALL THREE_LINE; Transfer three-wire fat code Subroutine
        INC DAIFAZHI        ; Code value plus 1 fat
        MOV A,DAIFAZHI
        CJNE A,#220,XX2 ; Whether reach max 220 of the Voice paragraph or not
XX2: JC XX3
        MOV DAIFAZHI,#0H
XX3: LJMP MAIN

THREE_LINE:                 ;//// three-wire fat code Subroutine
            CLR CS
            MOV R6,#5       ; Dalay time 5MS
            LCALL DELAY1MS
                MOV A,DAIFAZHI
        LOOP:
                CLR SCL
                RRC A
                MOV SDA,C
                LCALL DELAY50US
                SETB SCL
            LCALL DELAY50US
                DJNZ R5,LOOP
                MOV R5,#08H
                SETB CS
                RET
DELAY50US:      MOV R6,#150         ; Subroutine of dalay time 300US
                    DJNZ R6,$
            RET
DELAY1MS:                       ; Delay Subroutine 1ms, help R6 evaluate, Modified to extend the time

          L1: MOV R7,#248
          L2: NOP
              NOP
```

```
            DJNZ R7,L2
            DJNZ R6,L1
          RET
              END
```

10.4、Three-wire serial control of C-voice procedures

Description: This procedure is test program.Please change the IO port of MCU according to Practical application.

```
#include <at89x51.H>
sbit KEY=P1^1; /*        The 2nd of P1 port is P1_1 */
sbit   CS=P3^1; /*       The 3rd of P3 port is P3_1 */
sbit SCL=P3^2; /*        The 4th of P3 port is P3_2 */
sbit SDA=P3^0; /*        The 5th of P3 port isP3_0 */
//sbit DENG=P3^7; /*    The 6th of P3 port is P3_5- */
void delay1ms(unsigned char count) //1MS Dalay time subroutine
{
        unsigned char i,j,k;
        for(k=count;k>0;k--)
             for(i=2;i>0;i--)
             for(j=248;j>0;j--);
}

void delay100us(void)   //100US Dalay time subroutine
{
        unsigned char j;
               for(j=50;j>0;j--);
}

Send_threelines(unsigned char addr) // three-wire fat code Subroutine
        {unsigned char i;
             CS=0;
             delay1ms(5);
        for(i=0;i<8;i++)
             {SCL=0;
             if(addr & 1)SDA=1;
             else SDA=0;
```

```
            addr>>=1;
            Delay300us();    /* 300us */
            SCL=1;
            Delay300us();
            }
            CS=1;
        }

main()
{unsigned char FD=0;
             P3=0XFF;
             while(1)
            {
            if(KEY==0)
              {
                  delay1ms(20);
                  if(KEY==0)       //Increase Code value of fat by button P1.1.
                  {
                      Send three-line (FD);
                 FD++;
                      if(FD==220//Three-wire Serial port, the voice segment up to a maximum of 220
        {
                          FD=0;
                       }
                      while(KEY==0);    // Waiting for button release in order to avoid Miscarriage of justice
                       }
                 }
            }
}
```

11、Package size Figure

Units：mm

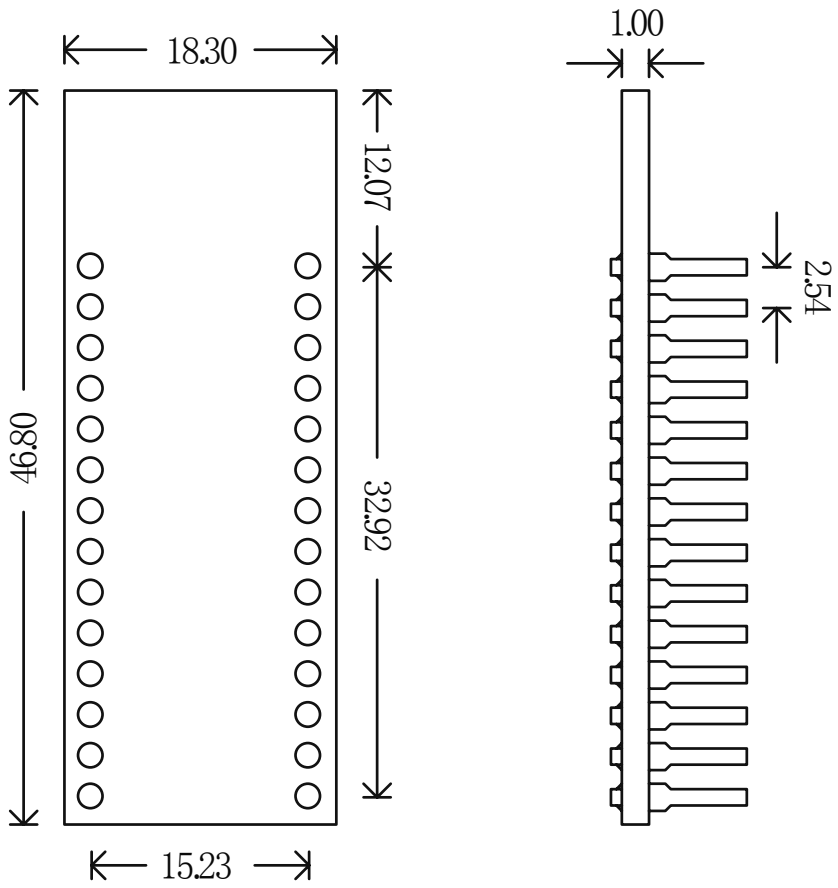

12、Sources of information

Sequence number	Package	Type	Speech time（6K）	Memory capacity	Practical photos
1	DIP28	WT588D-U	Depends on the memory	Depends on the memory	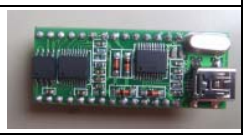

2	SSOP20	WT588D-20SS	-----	-----	
3	SSOP20	WTU02-20SS	-----	-----	
4	SOP8	25P20	33s	2M	
5	SOP8	25P40	102s	4M	
6	SOP8	25P80	238s	8M	
7	SOP8	25P16	516s	16M	
8	SOP8	25P32	1057s	32M	

13、The corresponding relations among SPI-Flash memory capacity, sample rates and time SPI-Flash

The corresponding relations among memory capacity, sample rates and time.（The following data is calculated in the application of WT588D.Doesn't mean that the Storage of data in other applications.）

Memorizer / Time / Sampling rate	2M	4M	8M	16M	32M
6KHz	33	101	238	511	1057
8KHz	25	76	178	383	793
10KHz	20	61	143	307	634
12KHz	17	51	119	255	529
14KHz	14	43	102	219	453
16KHz	12	38	89	192	396
18KHz	11	34	79	170	352
20KHz	10	30	71	153	317

14、Instruction edition and history records

Edition	Date	Description
V1.0	2009-06-24	Original edition
V1.1	2009-06-02	Revision